Pierce / Crop - T10418 on T9285 Loc D2 (Ch D19)
U Raise - T10419 on T8320/T9863 Loc M2 (Ch C38/39/40)

DT 1536

Blank Length = 111.5mm
Pitch = 117.5mm

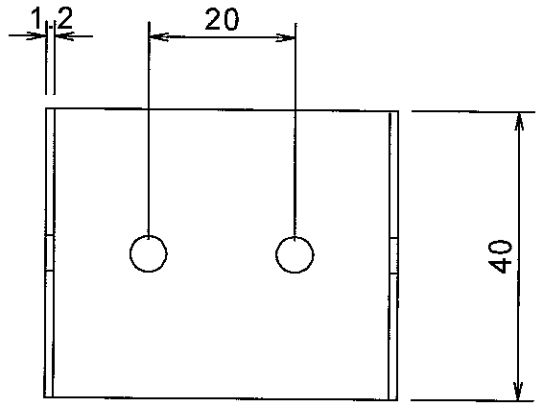

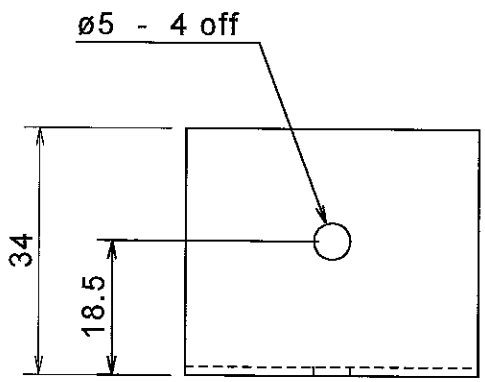

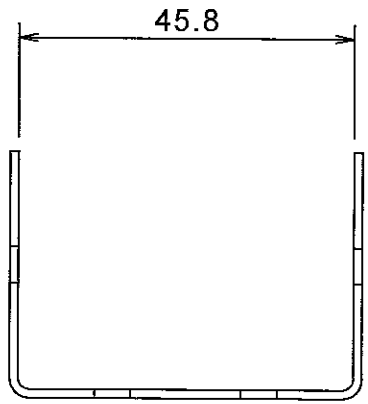

General Tolerance: ±0.5mm / ±1°

No.	DESCRIPTION	DATE

REVISION

N.E. Fasteners Ltd
Post Bracket
NEF00008

DRAWN	CHECKED	APPROVED	DATE	SCALE
M Westwood			31/10/11	1 : 1

DRAWING No. DT 1536